PAHI
Barcelona

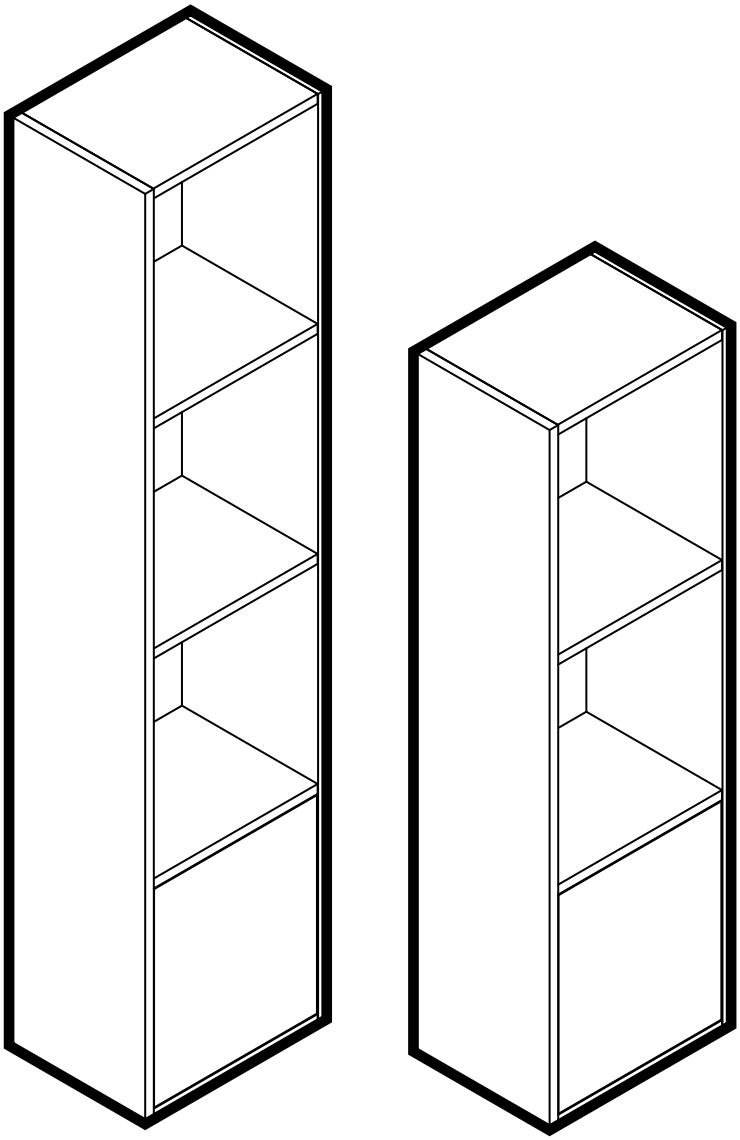

BOOKMAN

Ref. M0833

Receptions

Updated: 01 Feb. 2018

(mm)

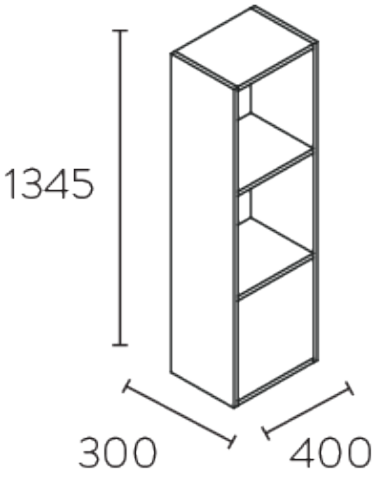

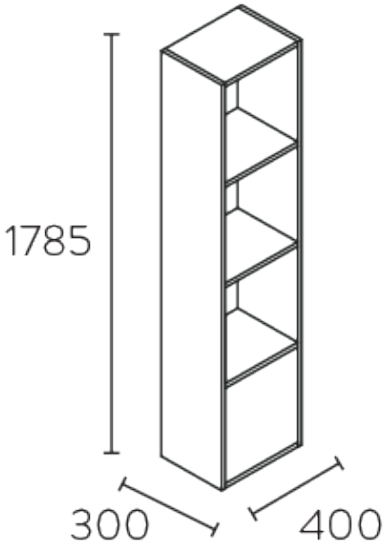

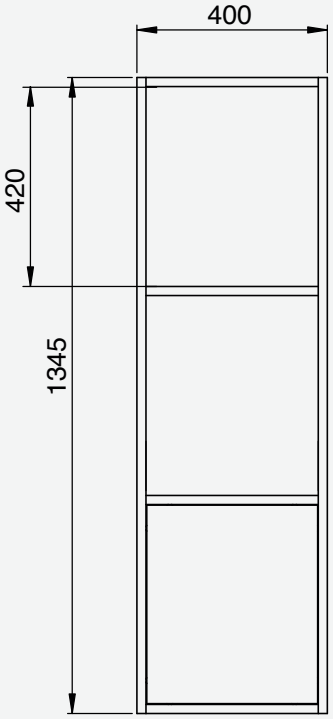

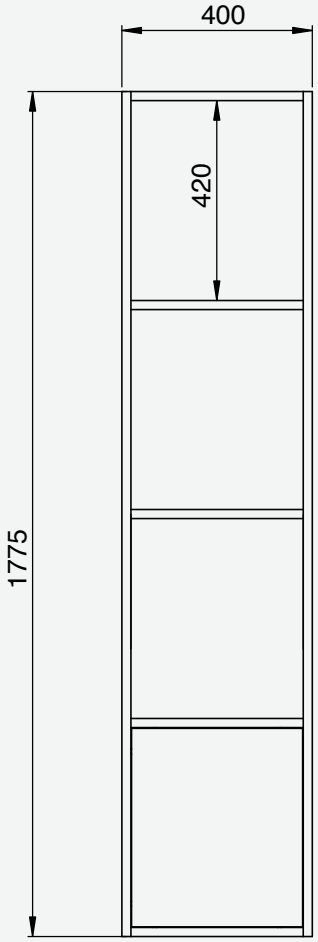

In the box /En la caja/Dans la boîte

Furniture /Mueble/Meuble

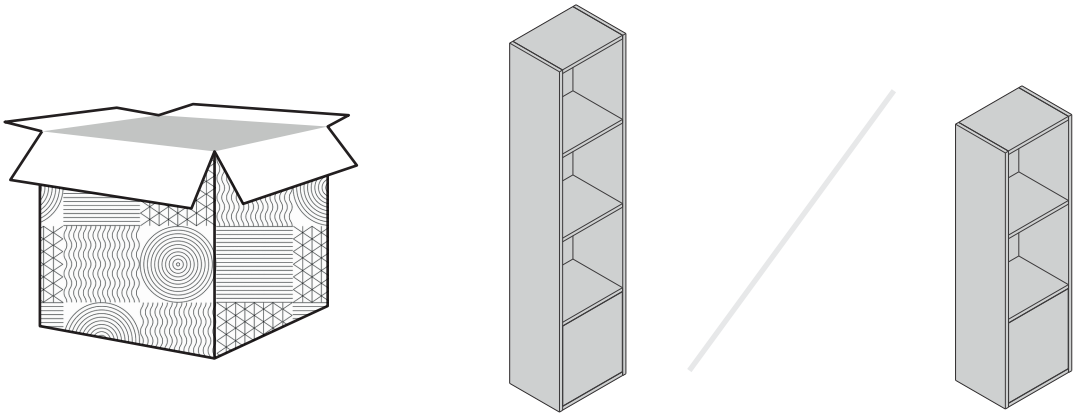

Inside View /Vista Interior/Vue intérieure

Push opening system /Sistema de apertura push/Système d'ouverture push

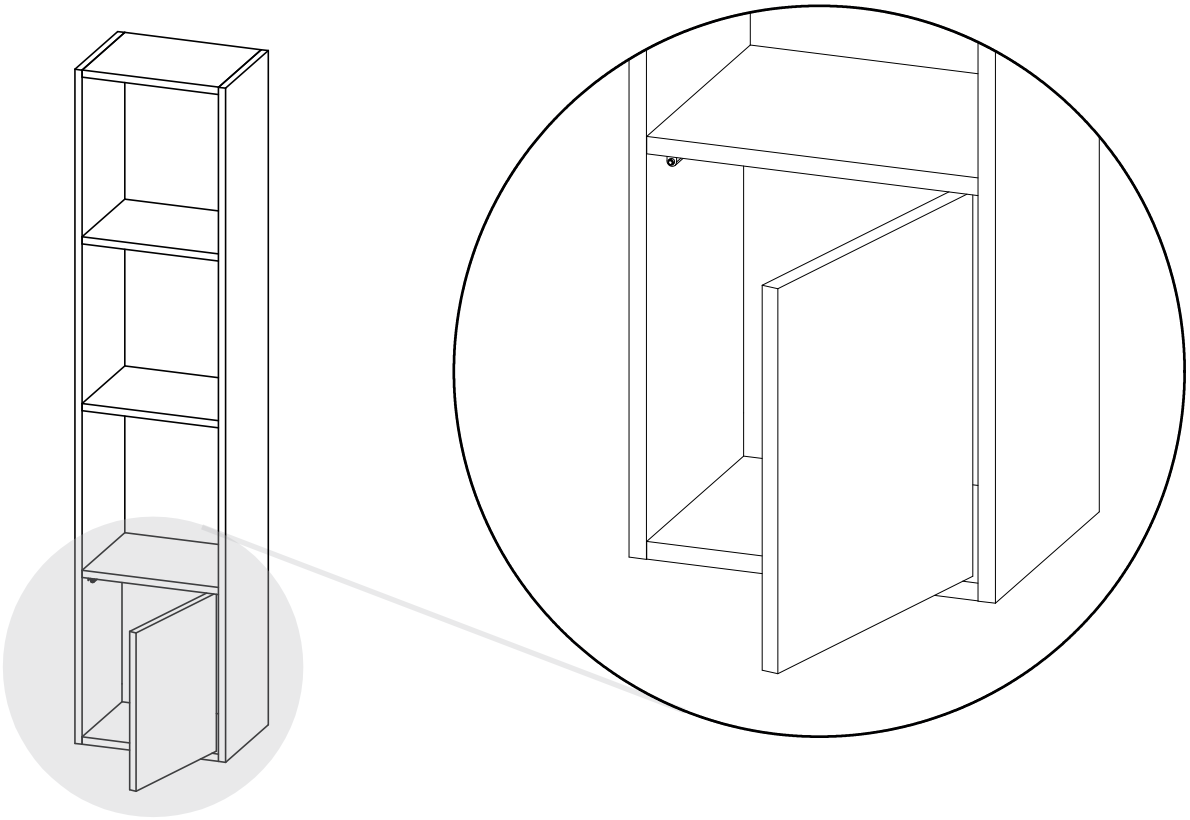

Address

Pol. Ind. Mas Galí
Barcelona, 32-34
08503 Gurb
Barcelona

Contact

T +34 938 890 417
F +34 938 890 585
pahi@pahi.com
PAHI.COM